BORDOLESE 2 0.750



KMC
GLASS

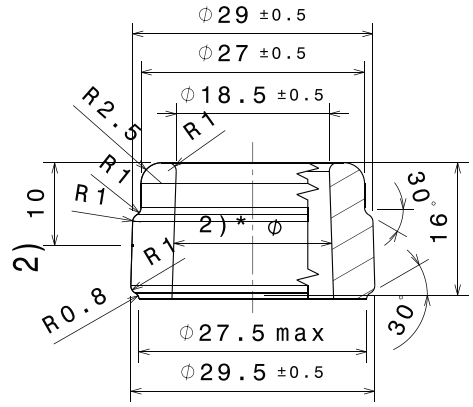

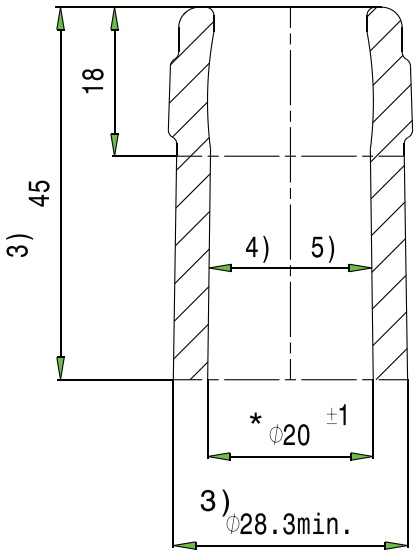

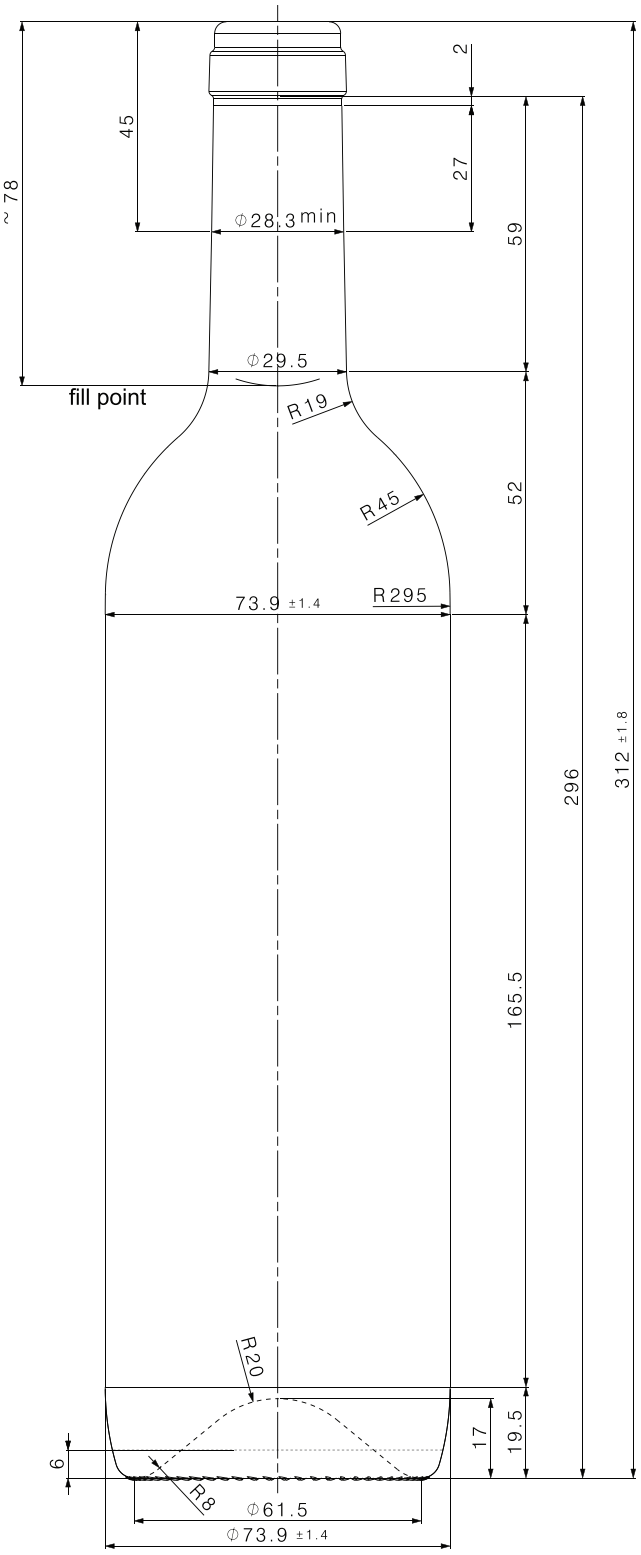

1)This diameter is applicable from top of the finish, till 3 mm below it.
2)The average diameter can be 1 mm larger than the internal (18,5 mm) diameter
3) The average diameter is the arithmetical mean of the largest and smallest values.
4) For a tight cork closing, the average diameter should not be smaller than internal (18,5 mm) diameter.
5) When the diameter of the filling tube is maximum 16 mm, for safety the internal diameter should be minimum 17,5 mm.

- Bordolese 2
- Filling CAP - 750 ml
- Weight - 460 g
- Height - 312±1.8 mm
- Diameter - 73.9±1.4 mm
- Entrance Bore Diameter - 18.5±0.5 mm
- Color - Olive Green

www.kmc.glass
sales@kmc.glass

KMC GLASS